THIRD ANGLE PROJECTION	DOCUMENT REVISIONS			
	REV	DESCRIPTION	CO NO.	DATE	CHG/CHK
	1	PRELIMINARY RELEASE	--	--	--

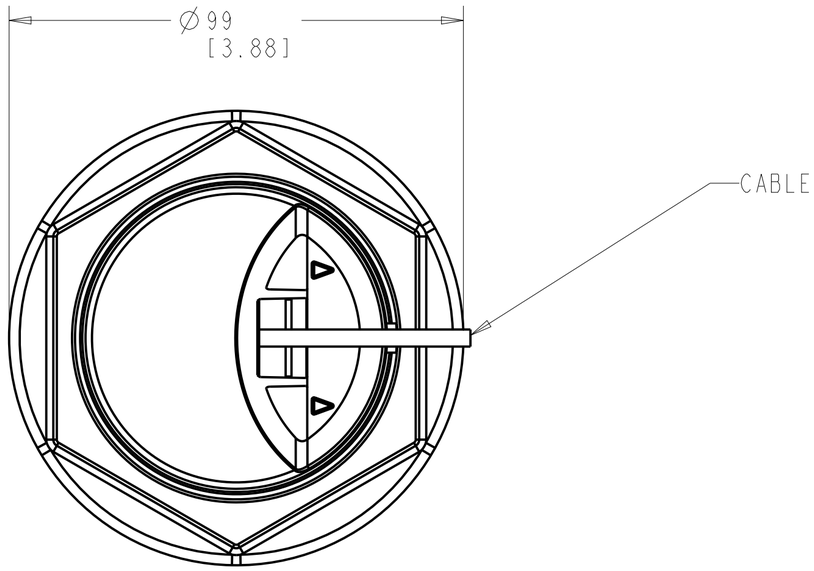

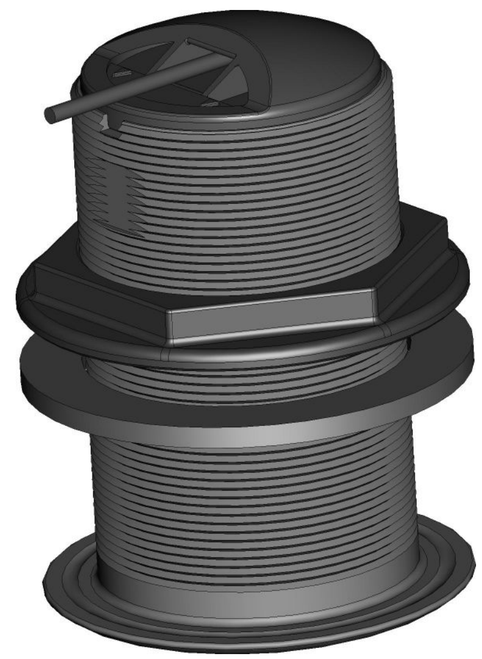

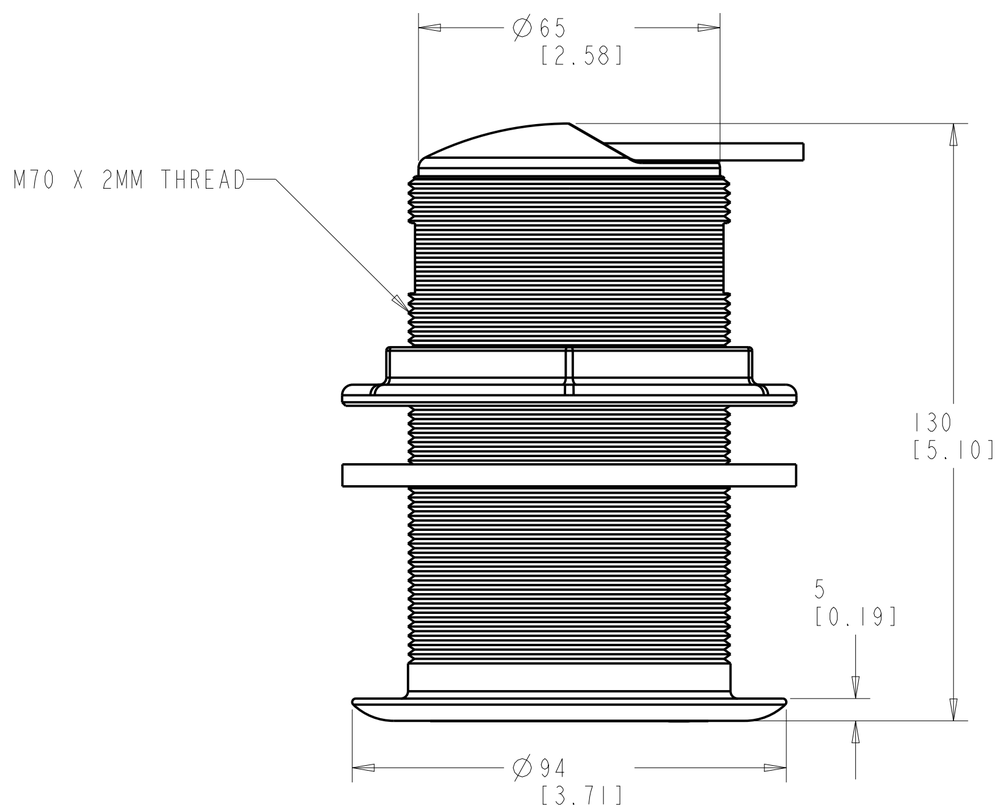

TABLE		
MODEL	HOUSING	ACOUSTIC WINDOW
B75	BRONZE	URETHANE
SS75	STAINLESS STEEL	URETHANE

PART NUMBER	P/N REV
N/A	

UNLESS OTHERWISE SPECIFIED	SIGNATURE	DATE
DIMENSIONS ARE IN MM TOLERANCES ON 0 PL DECIMALS: ±2 1 PL DECIMALS: ±0.5 ANGLES: ±1/2° FRACTIONS: ±1/16	DRAWN: D.SPALDING	05/31/2018
	CHECKED: J. DeCARLO	01/16/2020

MATERIAL
SEE TABLE

AIRMAR
AIRMAR TECHNOLOGY CORPORATION
35 MEADOWBROOK DR.
MILFORD, NH 03055-4613 USA
TEL:603-673-9570 FAX: 603-673-4624

TITLE
B75, SS75 OUTLINE DRAWING

SIZE	SCALE: FULL	DOC NUMBER	DOC REV
C	SHEET 1 OF 1	D-19055	1

THIS DOCUMENT AND THE DATA DISCLOSED HEREIN OR HEREWITH IS NOT TO BE REPRODUCED, USED, OR DISCLOSED IN WHOLE OR IN PART TO ANYONE WITHOUT THE PERMISSION OF AIRMAR.

CRITICAL DIMENSION (REF) DO NOT SCALE DRAWING